WIHAG®Van body kit

Assembly Instructions

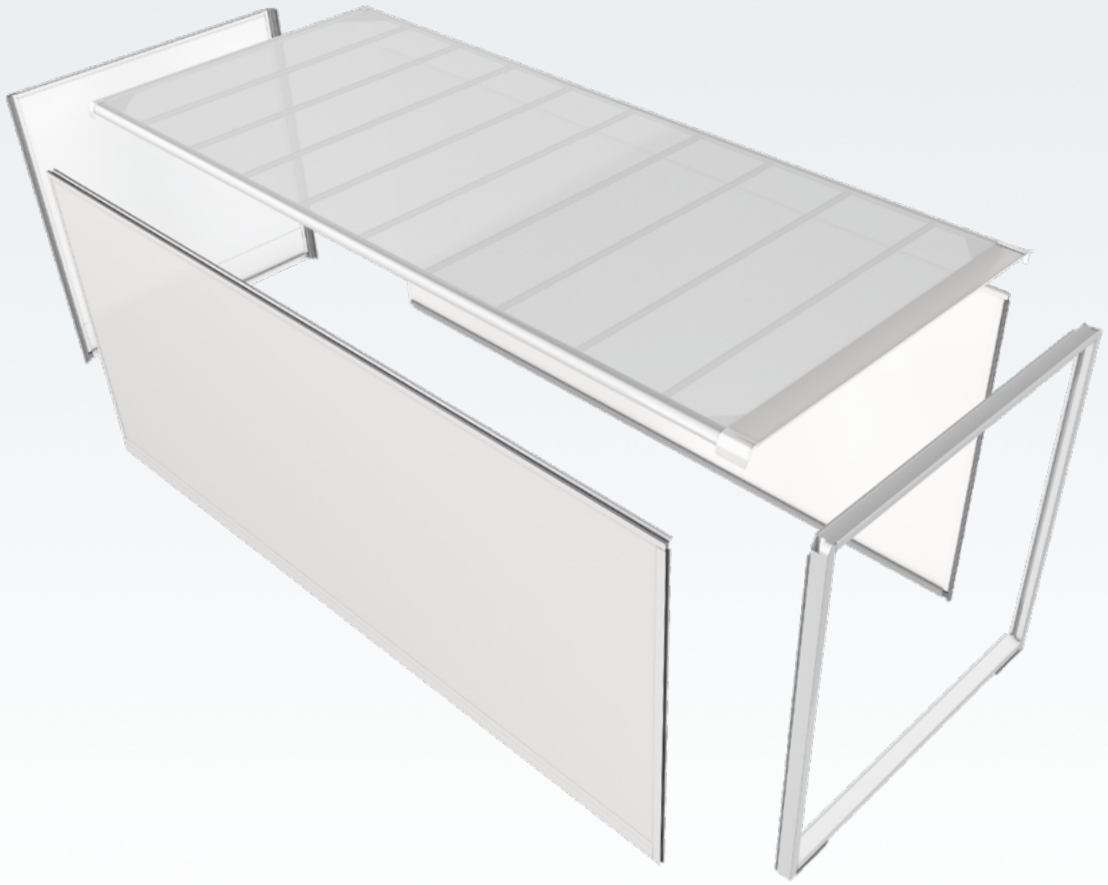

Bulkhead / side wall assembly

Please read through these fitting instructions carefully before starting installation work!

To ensure the function and quality of WIHAG kits, the transport rack with the individual kit elements must be stored in a dry place in a hall and must not be exposed to direct weather influences. In case of disregard, we reject any claims for damages and complaints!

The following assembly materials are supplied
- Self tapping screws 4.8 x 16 mm
- Depending on the roof design, blind rivets or Spax screws are used to attach the rear portal frame / roof
- Cleaner for adhesive areas
- One pouch of adhesive
- Door retainer, if required

Tools required for assembly
- Torque control drill, medium torque level, 1250 RPM Torque T 25
- Vice-grip clamps with narrow and long jaws
- Manual cartridge gun or compressed air cartridge gun for 310 ml cartridges
- Screw clamps
- One squared timber, approx. 2400 mm long
- Four squared timbers, approx. 600 mm long

Assembly sequence
- Bulkhead or rear door
- Side wall 1
- Side wall 2
- Rear frame or bulkhead
- Roof

Preparation
The bulkhead, side wall / side wall and rear frame interface, as well as the continuous roof interface, must be clean and dry. The individual components should be assembled on squared timbers positioned on a level surface.

Painting guidelines
In kits which are given a final coat of paint after assembly, the aluminium profiles are yellow chromated, i.e. have especially good oxidation protection. An undercoat and final coat can be applied without difficulty.

1

Check that the sealing cord in the corner pillar profile is undamaged and correctly positioned.

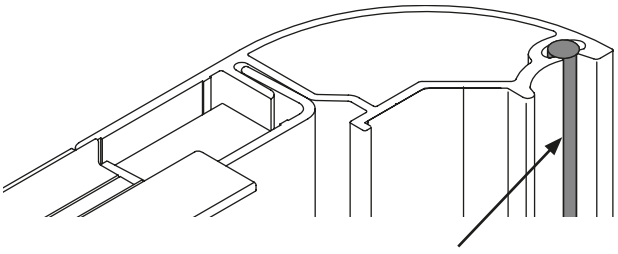

2

Place the bulkhead and one side wall on squared timbers, ensuring that they are at right angles.

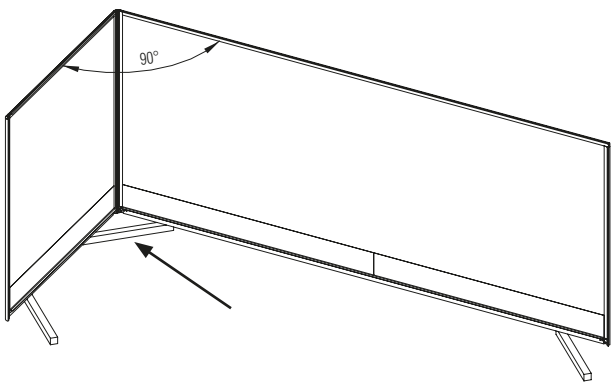

The technical specifications contained in this brochure are approximate and no guarantee is given as to their accuracy! Designs are subject to change. Our design proposals are non-binding!
WIHAG is a trademark, registered trademarks or product names belonging to the respective title holder.

Bulkhead / side wall assembly

3

Check that the height is the same at the bulkhead / side wall top.

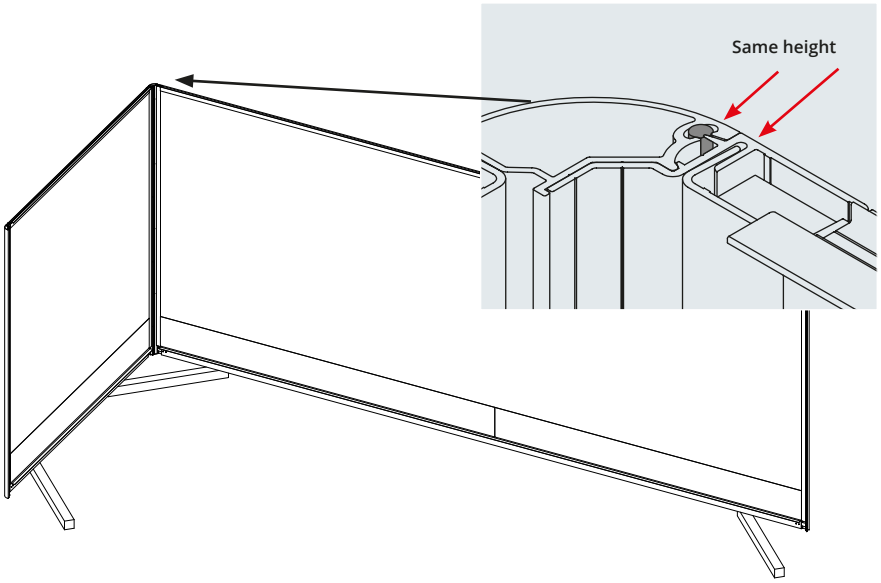

4

Fix the components using vice-grip clamp.

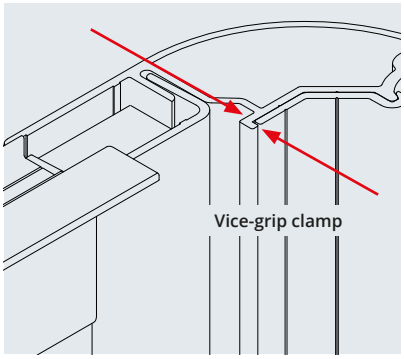

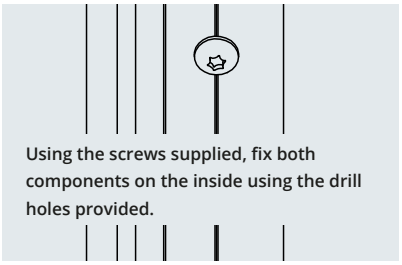

The fixing of the bulkhead/ sidewall has been designed and tested under real conditions to withstand normal loads. If the structure is likely to be subject to extra dynamic loads (e.g. due to the use of stacker trucks), the following possibility is available: Drill a ø 5.0 mm hole through the corner profiles between each of the existing fixing screws, and join the profile sections using the 4.8 x 10.8 mm (ø x L) stainless-steel blind rivets in the additional pack.

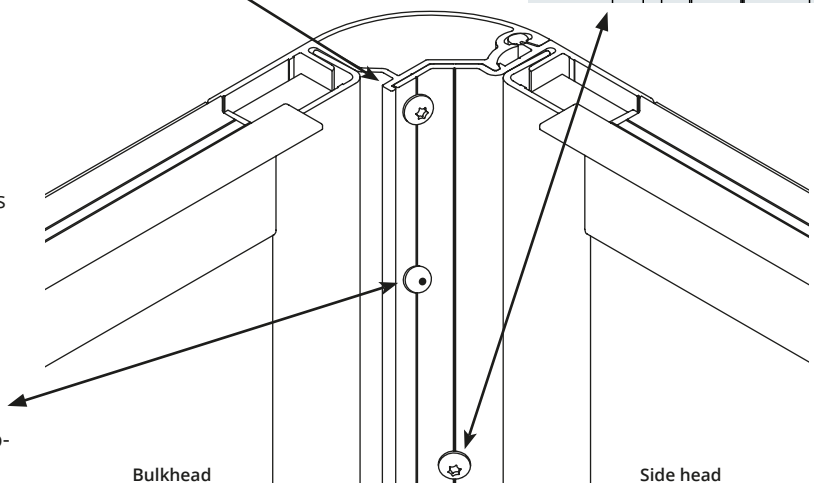

Right-hand bulkhead corner post attached at the top right to the right-hand (from above).

Repeat the above procedure, to complete the second side wall.

The technical specifications contained in this brochure are approximate and no guarantee is given as to their accuracy! Designs are subject to change. Our design proposals are non-binding!
WIHAG is a trademark, registered trademarks or product names belonging to the respective title holder.

Assembling the rear frame

5

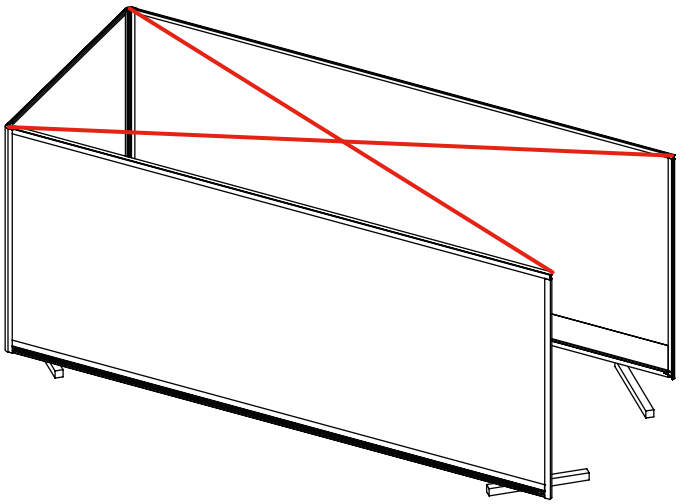

Measure the diagonals and realign the superstructure if necessary.

6

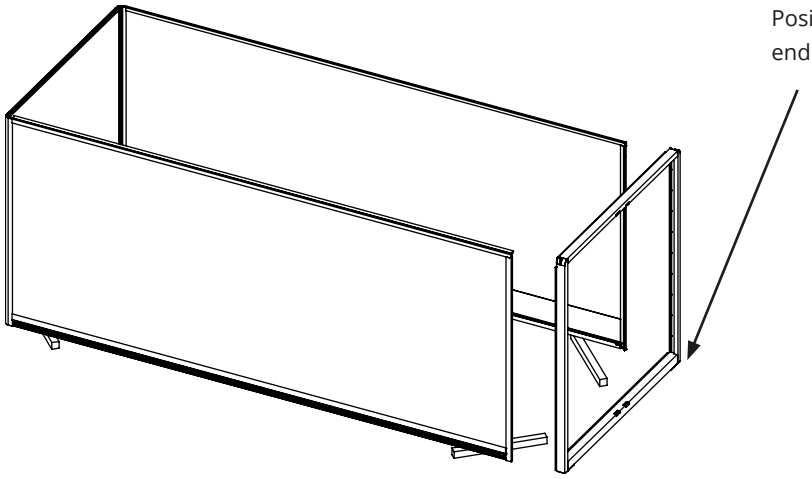

Position the rear door on squared timbers at the end of the side walls.

7

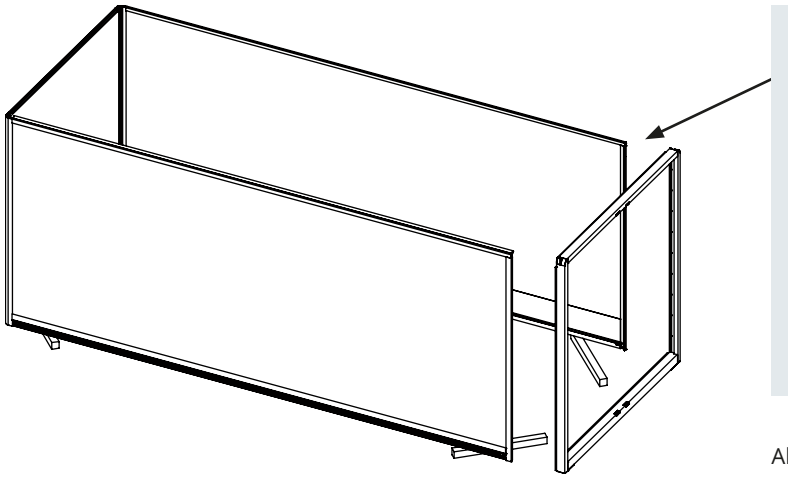

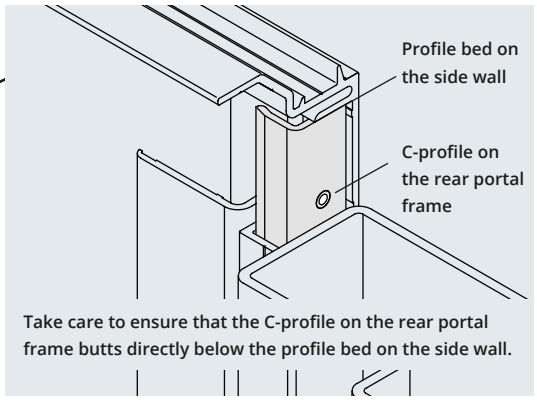

Take care to ensure that the C-profile on the rear portal frame butts directly below the profile bed on the side wall.

Also check the height in respect of the flooring.

The technical specifications contained in this brochure are approximate and no guarantee is given as to their accuracy! Designs are subject to change. Our design proposals are non-binding! WIHAG is a trademark, registered trademarks or product names belonging to the respective title holder.

Assembling the rear frame

8

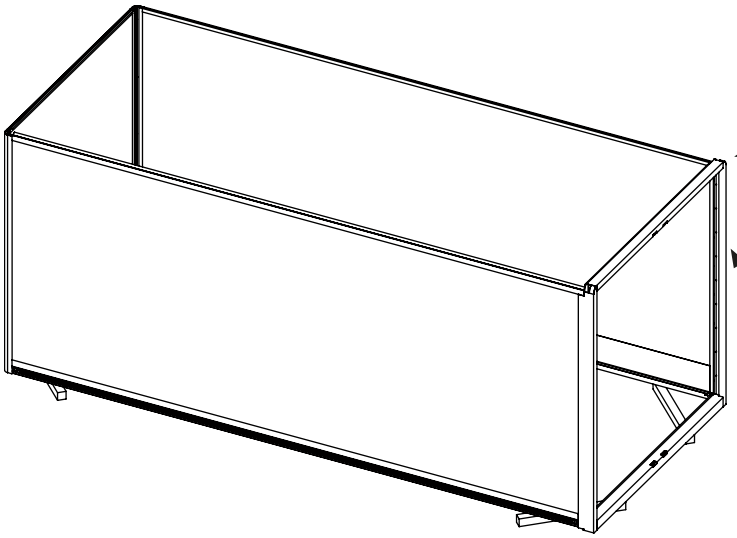

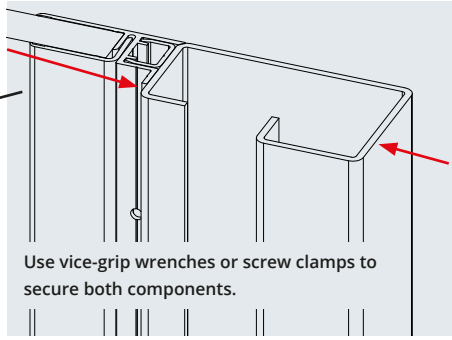

Use vice-grip wrenches or screw clamps to secure both components.

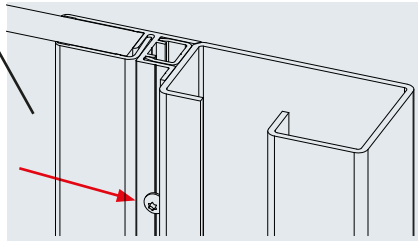

Using the drill screws supplied, screw the components on the inside using the drill holes provided.

The technical specifications contained in this brochure are approximate and no guarantee is given as to their accuracy! Designs are subject to change. Our design proposals are non-binding!
WIHAG is a trademark, registered trademarks or product names belonging to the respective title holder.

Roof assembly

9

Check that the sealing cord in the cantrail is undamaged and correctly positioned.

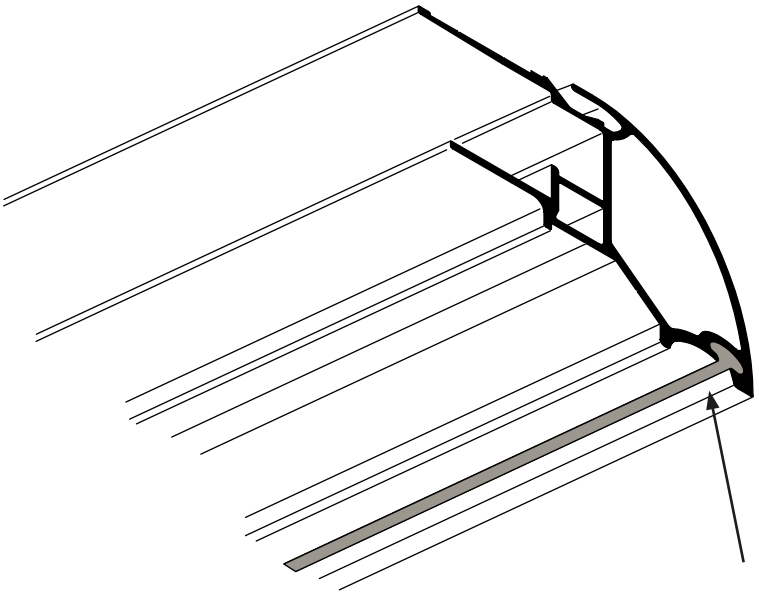

10

Check the diagonal dimensions and height again, and realign if necessary.

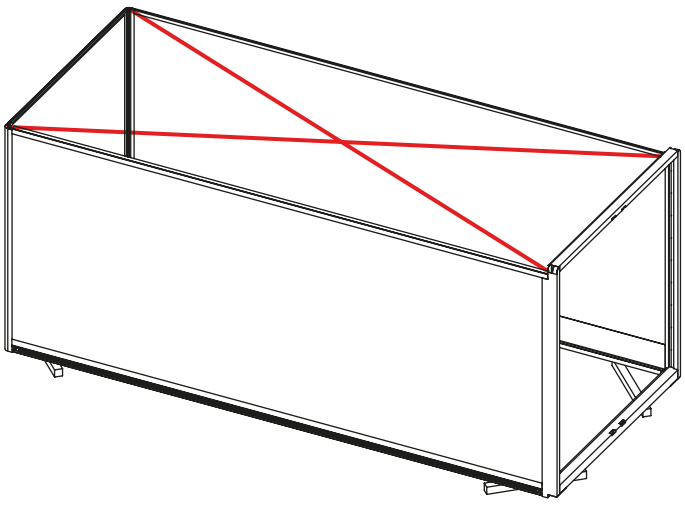

11

Using the supplied cleaner, clean the inside of all four corner caps on the roof as well as the top side of the rear door and the surfaces of the bulkhead and side wall in and around the corners.

The technical specifications contained in this brochure are approximate and no guarantee is given as to their accuracy! Designs are subject to change. Our design proposals are non-binding!
WIHAG is a trademark, registered trademarks or product names belonging to the respective title holder.

Roof assembly

12

Apply adhesive to the top side of the rear door and to the inside of the corner caps (front and back).

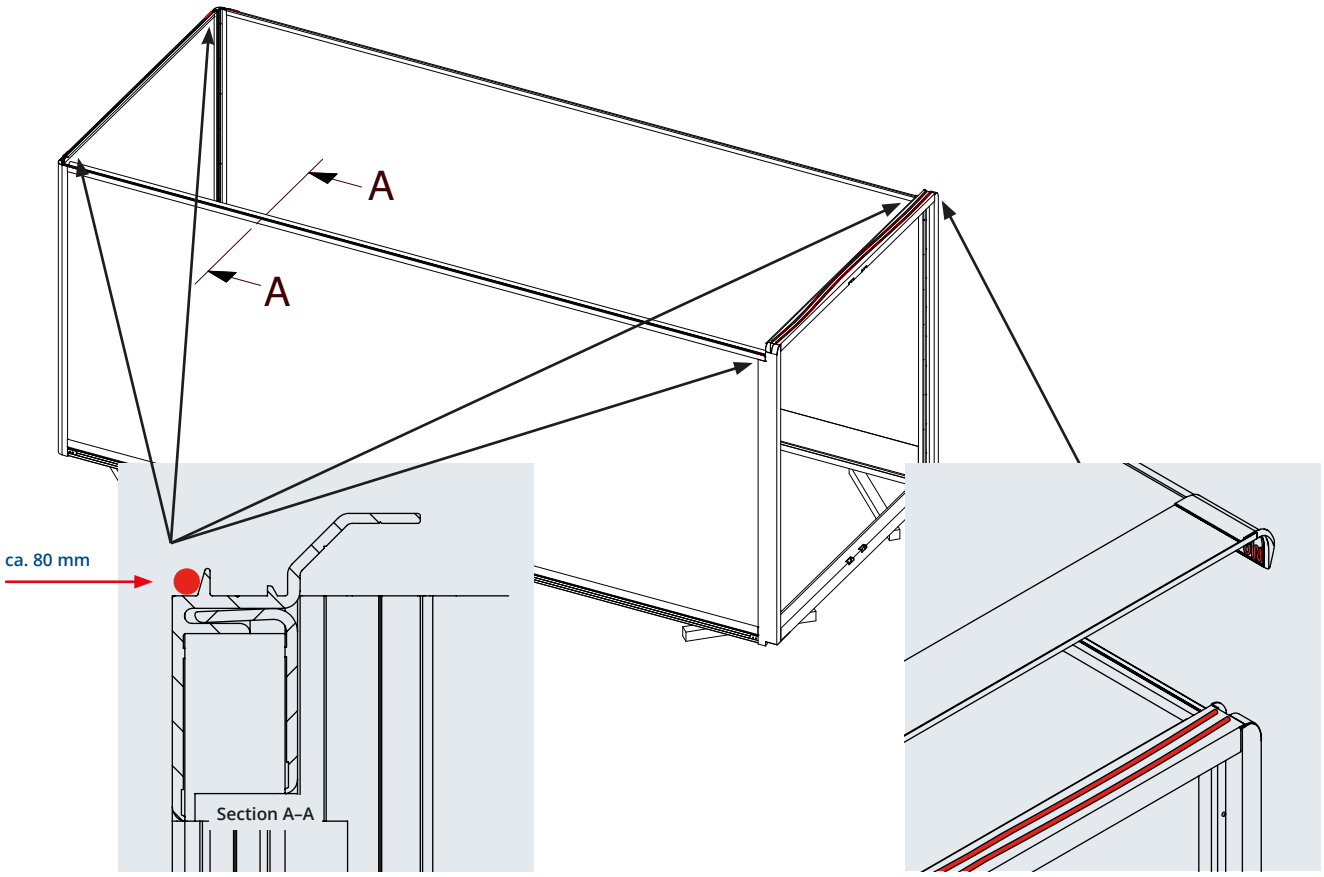

Additional 80 mm bead of glue in the corners of the roof

Fig. 6

13

Position the roof, making sure it sits properly.

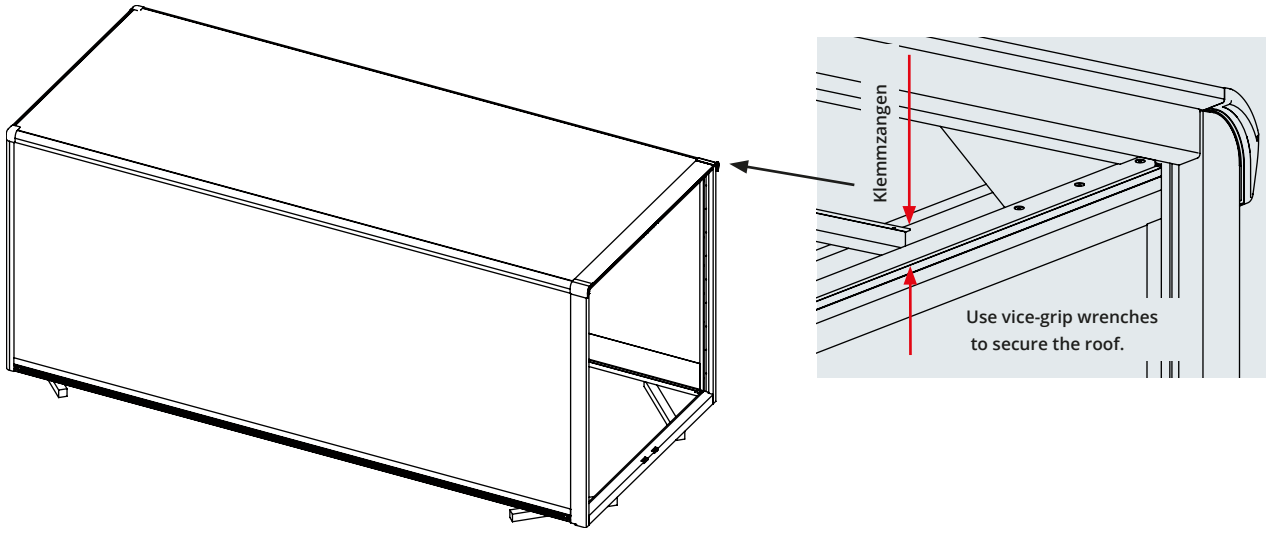

The technical specifications contained in this brochure are approximate and no guarantee is given as to their accuracy! Designs are subject to change. Our design proposals are non-binding!
WIHAG is a trademark, registered trademarks or product names belonging to the respective title holder.

Roof assembly

14

First fasten the roof along the top side of the bulkhead. Use vice-grip wrenches to pull the cantrail onto the side wall profile and then fasten the side walls to the roof from front to back.

It is not possible to apply vice-grip wrenches on the inside when fitting the sandwich roof. Always ensure that the roof fits flush on the outside before fastening on the inside.

To ensure that the end profile of the roof is pressed firmly onto the rear portal frame, lay e.g. some square timber lengthways on top of the rear section and tension using screw clamps.

For rear portal frame designs with a top flap above the tail-lift, tighten when closed, using e.g. long screw clamps along the closed top flap.

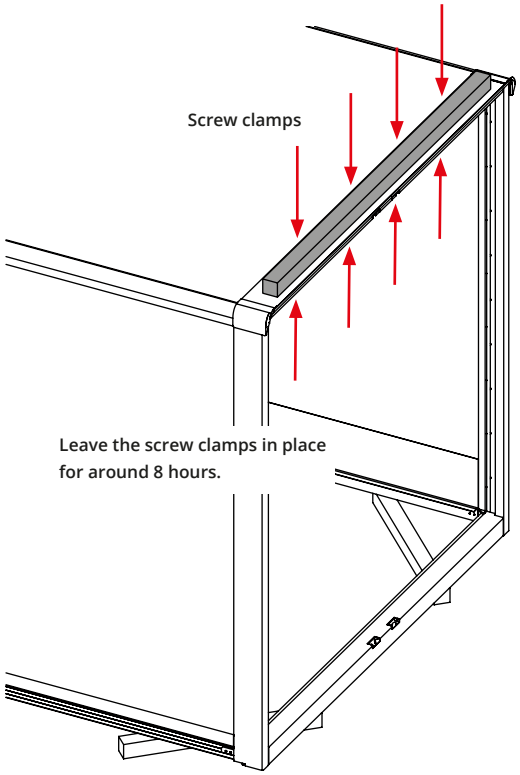

15

Using the supplied TIBULB blind rivets, fasten the rear portal frame at the back along the length of roof. On sandwich roof designs, use the supplied Spax screws as fasteners.

Additional roof fasteners (rivets) will need to be installed for kits that are longer than 6000 mm. Drill a hole (5 mm) below each roof bow near the point where the “side wall and roof” are to be joined. On sandwich roof versions, drill holes every 600 mm. Then connect the side wall to the roof using the TIBULB blind rivets supplied.

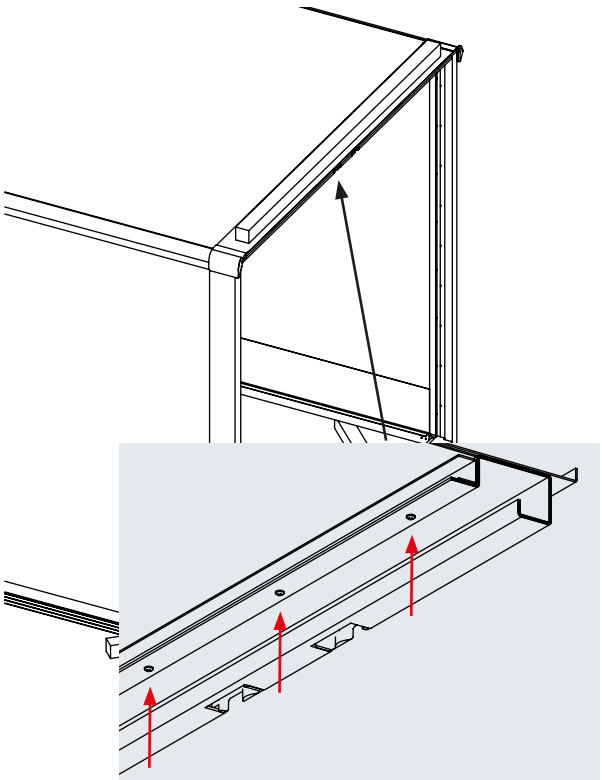

The technical specifications contained in this brochure are approximate and no guarantee is given as to their accuracy! Designs are subject to change. Our design proposals are non-binding!
WIHAG is a trademark, registered trademarks or product names belonging to the respective title holder.

Mounting Body

16

Seal from the outside the front and/or rear corner caps as well as the rear end plate connected to the rear portal frame.

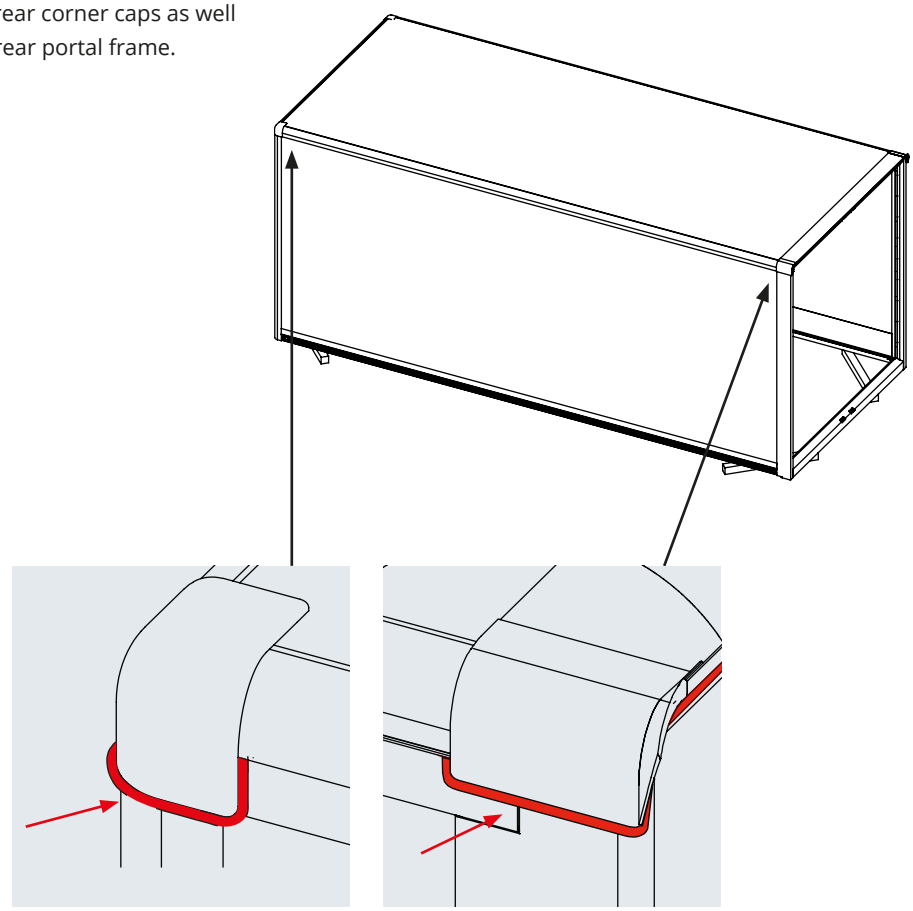

The technical specifications contained in this brochure are approximate and no guarantee is given as to their accuracy! Designs are subject to change. Our design proposals are non-binding!
WIHAG is a trademark, registered trademarks or product names belonging to the respective title holder.

Installation on base assembly

17

The kit does not require a resting or curing period, and can be immediately fitted to, for example, a WIHAG®Van Frame base assembly.

Once the box body has been fitted to the base assembly and the paint job completed, the outer flashing must be fitted to the body kit side rave.

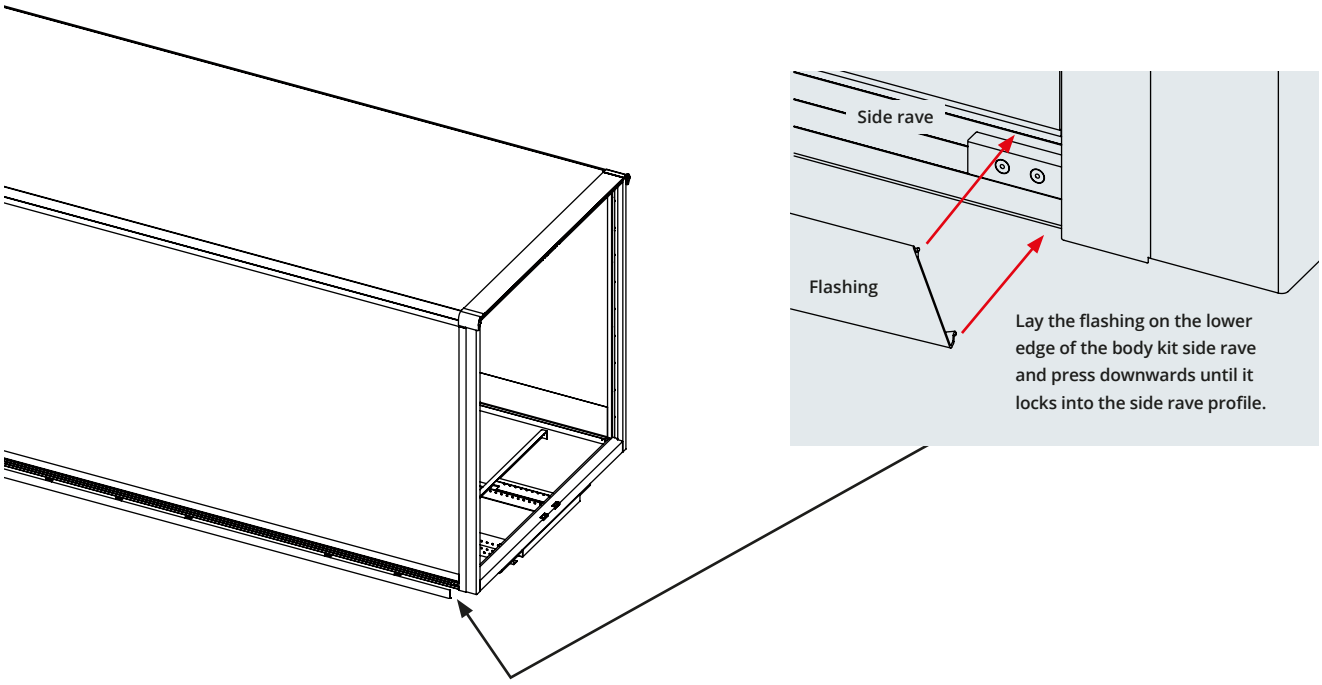

The technical specifications contained in this brochure are approximate and no guarantee is given as to their accuracy! Designs are subject to change. Our design proposals are non-binding!
WIHAG is a trademark, registered trademarks or product names belonging to the respective title holder.

Important notes

Coating

The kit does not require any waiting or hardening time. Please note the following: If you intend to paint the roof, prime it in a light colour.

Storage/handling

Exposed cut edges should not come into contact with water.

Cleaning

The end-customer (operator) of GRP structures must be informed of the special precautions to be taken when cleaning body sections. The use of a cleaning or washing product with an unsuitable pH may harm, or even lead to repairable damage to, the surface finish. Excessive use of a high-pressure washer, or bringing the nozzle too close to the surface, can also cause irreparable damage to the panel surface.

The following basic rules should be observed:

Temperature:	70 °C max
Pressure:	80 bar max
Minimum distance between panel and nozzle:	30 cm
pH value:	between 2 and 10

Transport pallet

The reusable transport pallet remains the property of the WIHAG Company, and will be collected in the course of a subsequent delivery. Disposable pallets are left with the customer.

The technical specifications contained in this brochure are approximate and no guarantee is given as to their accuracy! Designs are subject to change. Our design proposals are non-binding!
WIHAG is a trademark, registered trademarks or product names belonging to the respective title holder.

WIHAG Fahrzeugbausysteme GmbH
Herforder Straße 22
33602 Bielefeld / DE

P.O. Box10 31 47
33531 Bielefeld / DE

T +49 521 1455–0
E post@wihag.de
W wihag.de

The technical specifications contained in this brochure are approximate and no guarantee is given as to their accuracy! Designs are subject to change. Our design proposals are non-binding!
WIHAG is a trademark, registered trademarks or product names belonging to the respective title holder.